Threaded Flanges ANSI B16.5 150 Lbs

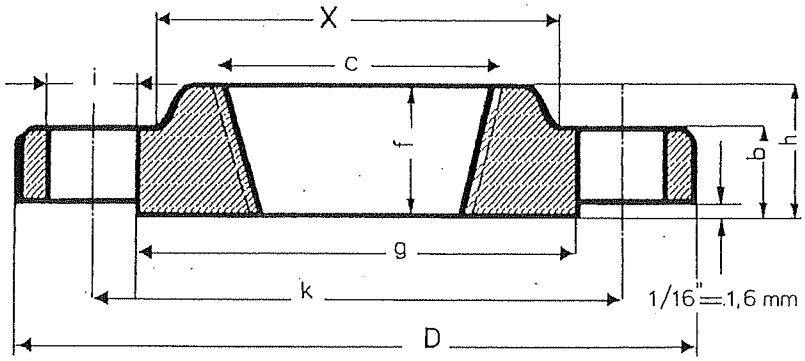

nominal pipe size	outside diam. of flange	thick-ness of flange	length tru hub	diam. of raised face	diam. of counter bore	mini. thread length	diam. of hub	drilling template			stud bolts			approx. weight kilo
								diam. of bolt circle	n° of holes	diam. of bolt holes	diam.	length		
												1/16" raised face	ring joint	
	D	b	h	g	c	f	X	k		i				
1/2"	88.9	11.1	15.9	34.9	23.6	15.9	30.2	60.3	4	15.9	1/2	2 1/2	-	0.8
3/4"	98.4	12.7	15.9	42.9	29.0	15.9	38.1	69.8	4	15.9	1/2	2 1/2	-	0.9
1"	107.9	14.3	17.5	50.8	35.8	17.5	49.2	79.4	4	15.9	1/2	2 3/4	3 1/4	1.0
1 1/4"	117.5	15.9	20.6	63.5	44.4	20.6	58.7	88.9	4	15.9	1/2	2 3/4	3 1/4	1.3
1 1/2"	127.0	17.5	22.2	73.0	50.6	22.2	65.1	98.4	4	15.9	1/2	3	3 1/2	1.4
2"	152.4	19.0	25.4	92.1	63.5	25.4	77.6	120.6	4	19.0	5/8	3 1/4	3 3/4	2.3
2 1/2"	177.8	22.2	28.6	104.8	76.2	28.6	90.5	139.7	4	19.0	5/8	3 1/2	4	3.2
3"	190.5	23.8	30.2	127.0	92.2	30.2	107.9	152.4	4	19.0	5/8	3 3/4	4 1/4	3.6
3 1/2"	215.9	23.8	31.7	139.7	104.9	31.7	122.2	177.8	8	19.0	5/8	3 3/4	4 1/4	5.0
4"	228.6	23.8	33.3	157.2	117.6	33.3	134.9	190.5	8	19.0	5/8	3 3/4	4 1/4	5.9
5"	254.0	23.8	36.5	185.7	144.4	36.5	163.5	215.9	8	22.2	3/4	4	4 1/2	6.8
6"	279.4	25.4	39.7	215.9	171.4	39.7	192.1	241.3	8	22.2	3/4	4	4 1/2	8.6
8"	342.9	28.6	44.4	269.9	222.2	44.4	246.1	298.4	8	22.2	3/4	4 1/4	4 3/4	13.6

Threaded Flanges ANSI B16.5 300 Lbs

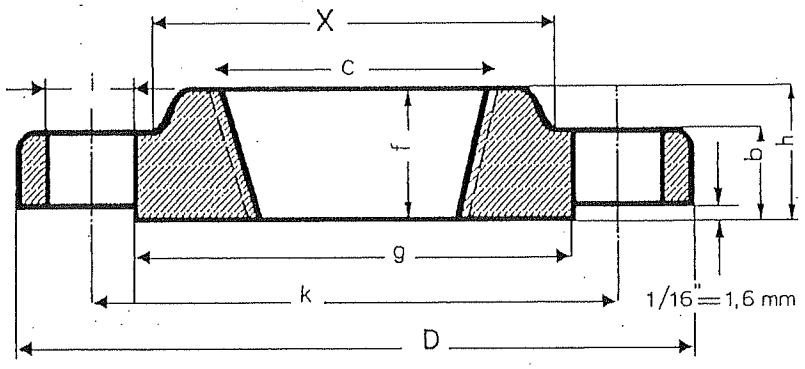

nominal pipe size	outside diam. of flange	thick-ness of flange	length tru hub	diam. of raised face	diam. of counter bore	mini. thread length	diam. of hub	drilling template			stud bolts			approx. weight kilo
								diam. of bolt circle	n° of holes	diam. of bolt holes	diam.	length		
												1/16'' raised face	ring joint	
	D	b	h	g	c	f	X	k		i				
1/2''	95.2	14.3	22.2	34.9	23.6	15.9	38.1	66.7	4	15.9	1/2	2 3/4	3	1.3
3/4''	117.5	15.9	25.4	42.9	29.0	15.9	47.6	82.5	4	19.0	5/8	3	3 1/2	1.4
1''	123.8	17.5	27.0	50.8	35.8	17.5	58.4	88.9	4	19.0	5/8	3 1/4	3 3/4	1.8
1 1/4''	133.3	19.0	27.0	63.5	44.4	20.6	63.5	98.4	4	19.0	5/8	3 1/4	3 3/4	2.7
1 1/2''	155.6	20.6	30.2	73.0	50.6	22.2	69.8	114.3	4	22.2	3/4	3 3/4	4 1/4	3.2
2''	165.1	22.2	33.3	92.1	63.5	28.6	84.1	127.0	8	19.0	5/8	3 1/2	4 1/4	4.1
2 1/2''	190.5	25.4	38.1	104.8	76.2	31.7	100.0	149.2	8	22.2	3/4	4	4 3/4	5.9
3''	209.5	28.6	42.9	127.0	92.2	31.7	117.5	168.3	8	22.2	3/4	4 1/4	5	7.3
3 1/2''	228.6	30.2	44.4	139.7	104.9	36.5	133.3	184.1	8	22.2	7/8	4 1/2	5 1/4	9.5
4''	254.0	31.7	47.6	157.2	117.6	36.5	146.0	200.0	8	22.2	7/8	4 1/2	5 1/4	11.8
5''	279.4	34.9	50.8	185.7	144.4	42.9	177.8	234.9	8	22.2	7/8	4 3/4	5 1/2	15.1
6''	317.5	36.5	52.4	215.9	171.4	46.0	206.4	269.9	12	22.2	7/8	5	5 3/4	17.7
8''	381.0	41.3	61.9	269.8	222.2	50.8	260.3	330.2	12	25.4	1	5 1/2	6 1/4	30.4

Threaded Flanges ANSI B16.5 600 Lbs

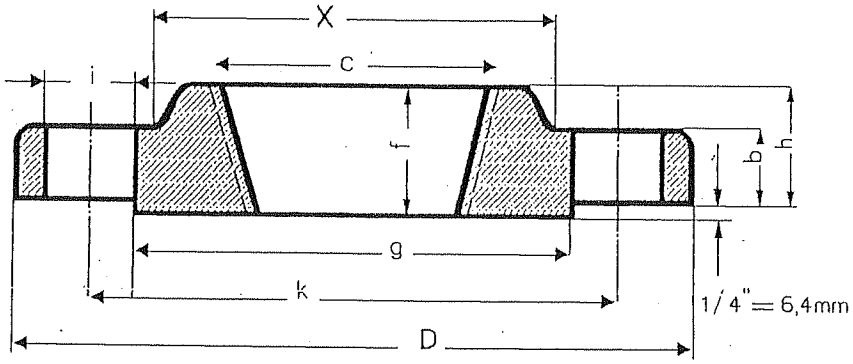

nominal pipe size	outside diam. of flange	thick-ness of flange	length tru hub	diam. of raised face	diam. of counter bore	mini. thread length	diam. of hub	drilling template			stud bolts			approx. weight kilo
								diam. of bolt circle	n° of holes	diam. of bolt holes	diam.	length		
												1/4" raised face	ring joint	
	D	b	h	g	c	f	X	k		i				
1/2"	95.2	14.3	22.2	34.9	23.6	15.9	38.7	66.7	4	15.9	1/2	3 1/4	3	1.3
3/4"	117.5	15.9	25.4	42.9	29.0	15.9	47.6	82.5	4	19.0	5/8	3 1/2	3 1/2	1.4
1"	123.8	17.5	27.0	50.8	35.8	17.5	54.0	88.9	4	19.0	5/8	3 3/4	3 3/4	1.8
1 1/4"	133.3	19.0	28.6	63.5	44.4	20.6	63.9	98.4	4	19.0	5/8	4	4	2.7
1 1/2"	155.6	22.2	31.7	73.0	50.5	22.2	69.8	114.3	4	22.2	3/4	4 1/4	4 1/4	3.2
2"	165.1	25.4	36.5	92.1	63.5	28.6	84.1	127.0	8	19.0	5/8	4 1/4	4 1/2	4.1
2 1/2"	190.5	28.6	41.3	104.8	76.2	31.7	100.0	149.2	8	22.2	3/4	4 3/4	5	5.9
3"	209.5	31.7	46.0	127.0	92.2	34.9	117.5	168.3	8	22.2	3/4	5	5 1/4	7.8
3 1/2"	228.6	34.9	49.2	139.7	104.9	39.7	133.3	184.1	8	25.4	7/8	5 1/2	5 3/4	9.5
4"	273.0	38.1	54.0	157.2	117.6	41.3	152.4	215.9	8	25.4	7/8	5 3/4	6	16.8
5"	330.2	44.4	60.3	185.7	144.5	47.7	188.9	266.7	8	28.6	1	6 1/2	6 3/4	28.6
6"	355.6	47.6	66.7	215.9	171.4	50.8	222.2	292.1	12	28.6	3/4	6 3/4	7	36.0
8"	419.1	55.6	76.2	269.9	222.2	57.1	273.0	349.2	12	31.7	1 1/8	7 3/4	7 3/4	52.0

Threaded Flanges ANSI B16.5 900 Lbs

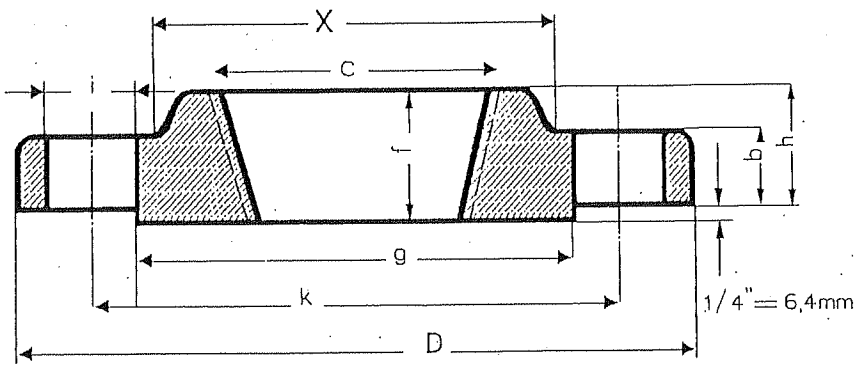

nominal pipe size	outside diam. of flange	thick-ness of flange	length tru hub	diam. of raised face	diam. of counter bore	mini. thread length	diam. of hub	drilling template			stud bolts			approx. weight kilo
								diam. of bolt circle	n° of holes	diam. of bolt holes	diam.	length		
												1/4" raised face	ring joint	
	D	b	h	g	c	f	X	k		i				
1/2" to 2 1/2"	use 1500 Lbs													
3"	241.3	38.1	54.0	127.0	92.2	41.2	122.0	190.5	8	25.4	7/8	5 3/4	6	18.1
4"	292.1	44.4	69.8	157.2	117.6	47.8	158.7	234.9	8	31.7	1 1/8	6 3/4	7	24.1
5"	349.2	50.8	79.4	185.7	144.5	53.8	190.5	279.4	8	34.9	1 1/4	7 1/2	7 3/4	38.0
6"	381.0	55.6	85.7	215.9	171.4	57.2	234.9	317.5	12	31.7	1 1/8	7 3/4	7 3/4	49.0
8"	469.9	63.5	101.6	269.9	222.2	63.5	298.4	393.7	12	38.1	1 3/8	8 3/4	9	78.0
10"	546.1	69.8	107.9	323.8	276.4	71.4	368.3	469.9	16	38.1	1 3/8	9 1/4	9 1/2	111.0

Threaded Flanges ANSI B16.5 1500 Lbs

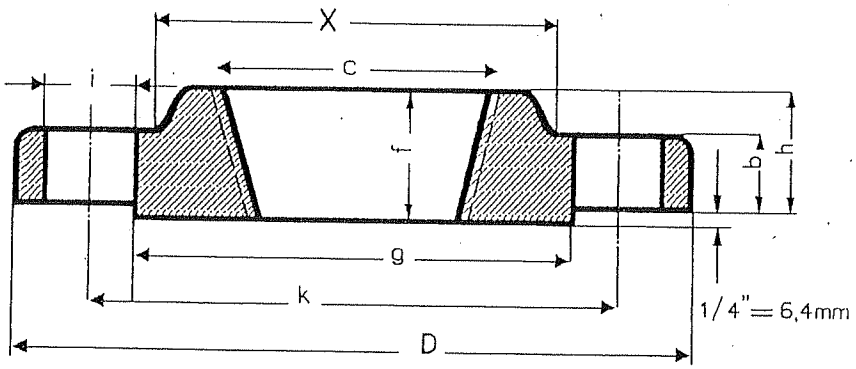

nominal pipe size	outside diam. of flange	thick-ness of flange	length tru hub	diam. of raised face	diam. of counter bore	mini. thread length	diam. of hub	drilling template			stud bolts			approx. weight kilo
								diam. of bolt circle	n° of holes	diam. of bolt holes	diam.	length		
												1/4" raised face	ring joint	
	D	b	h	g	c	f	X	k		i				
1/2"	120.6	22.2	31.7	34.9	23.6	22.2	38.7	82.5	4	22.2	3/4	4 1/4	4 1/4	3.2
3/4"	130.2	25.4	34.9	42.9	29.0	25.4	44.4	88.9	4	22.2	3/4	4 1/2	4 1/2	3.6
1"	149.2	28.6	41.3	50.8	35.8	28.6	52.4	101.6	4	25.4	7/8	5	5	4.1
1 1/4"	158.7	28.6	41.3	63.5	44.4	30.2	63.5	111.1	4	25.4	7/8	5	5	4.5
1 1/2"	177.8	31.7	44.4	73.0	50.5	31.7	69.8	123.8	4	28.6	1	5 1/2	5 1/2	6.4
2"	215.9	38.1	57.1	92.1	63.5	38.1	104.8	165.1	8	25.4	7/8	5 3/4	5 3/4	11.3
2 1/2"	244.5	41.3	63.5	104.8	76.2	47.6	123.8	190.5	8	28.6	1	6 1/4	6 1/4	16.3
3"	266.7	47.6	73.0	127.0	92.2	50.8	133.3	203.2	8	31.7	1 1/8	7	7	21.8
4"	311.1	54.0	90.5	157.2	117.6	57.1	161.9	241.3	8	34.9	1 1/4	7 3/4	7 3/4	33
5"	374.6	73.0	104.8	185.7	144.5	63.5	196.8	292.1	8	41.3	1 1/2	9 3/4	9 3/4	80
6"	393.7	82.5	119.1	215.9	171.4	69.8	228.6	317.5	12	38.1	1 3/8	10 1/4	10 1/2	74
8"	482.6	92.1	142.9	269.9	222.2	76.2	292.1	393.7	12	44.4	1 5/8	11 1/2	12	117
10"	584.2	107.9	158.7	323.8	276.4	84.1	368.3	482.6	12	50.8	1 7/8	13 1/4	13 3/4	198